HR 90

HAND RAIL BARRIER

LIGHT LOAD / FOR HANDPALLET TRUCKS

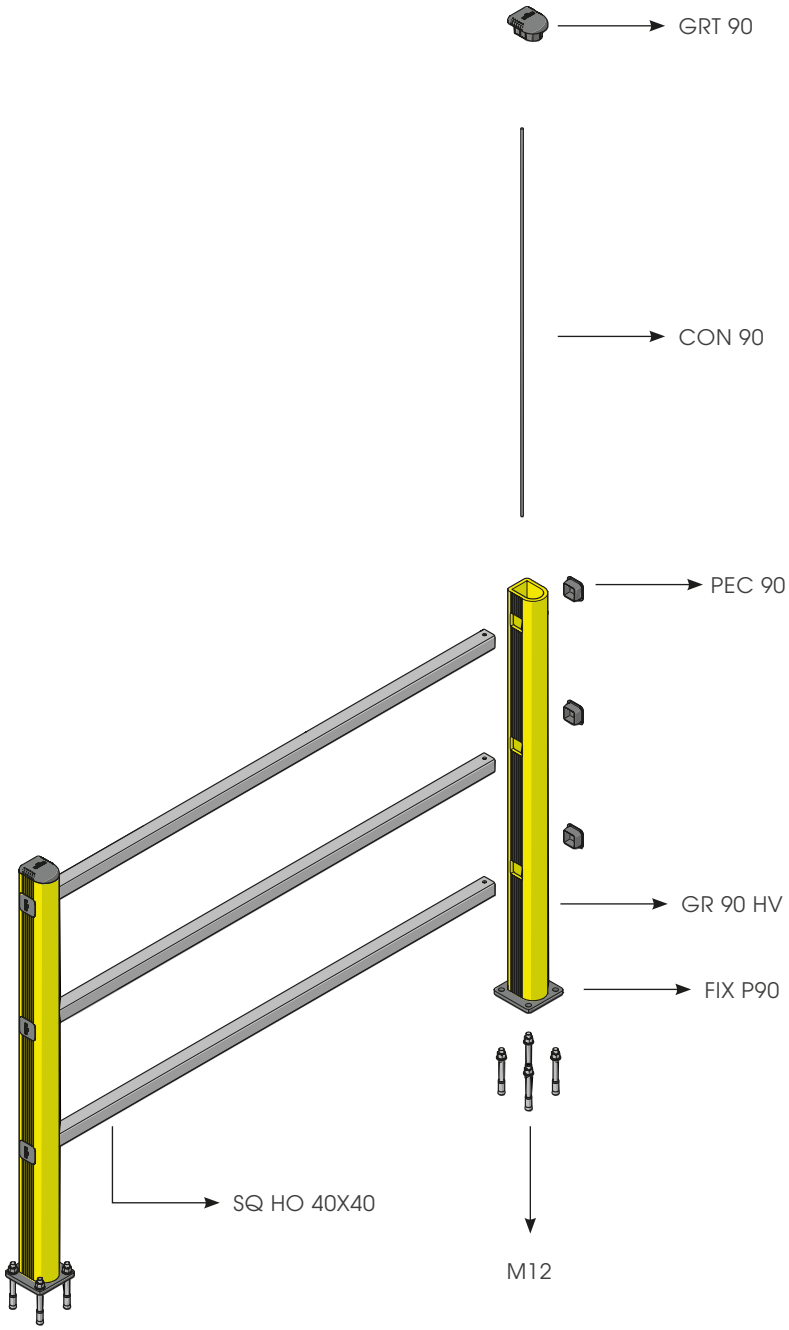

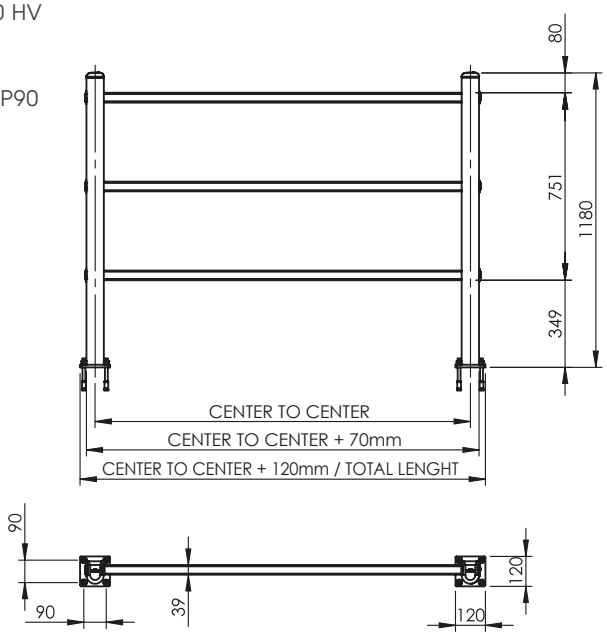

HR 90

ASSEMBLY INSTRUCTIONS

1

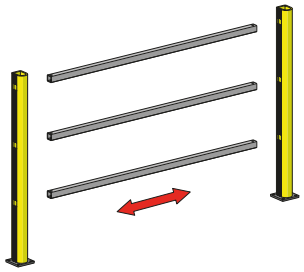

2

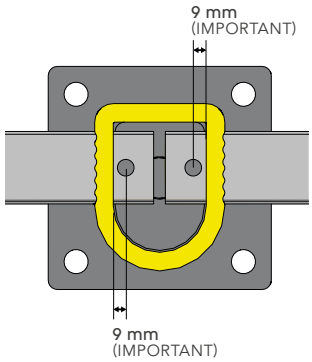

3

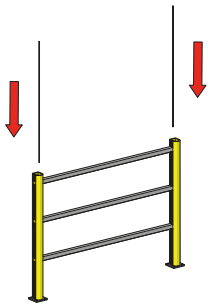

4

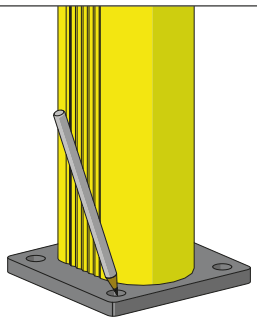

HR 90

ASSEMBLY INSTRUCTIONS

5

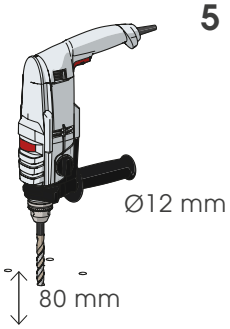

6

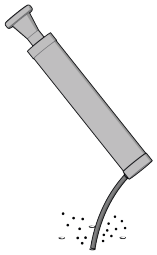

7

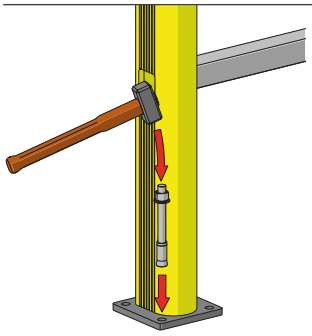

8

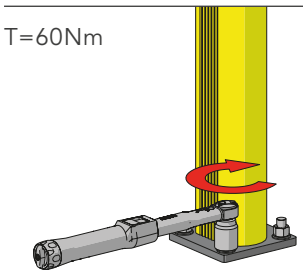

9

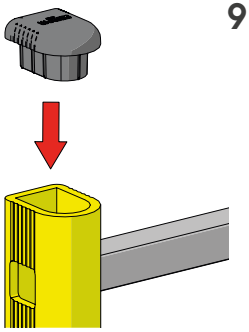
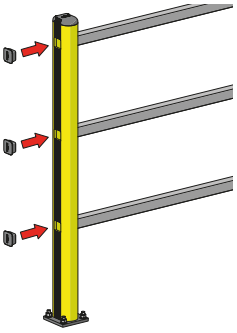
10